REV	ECN NO.	DISCRIPTION	CHEKED/DATE	APPD/DATE

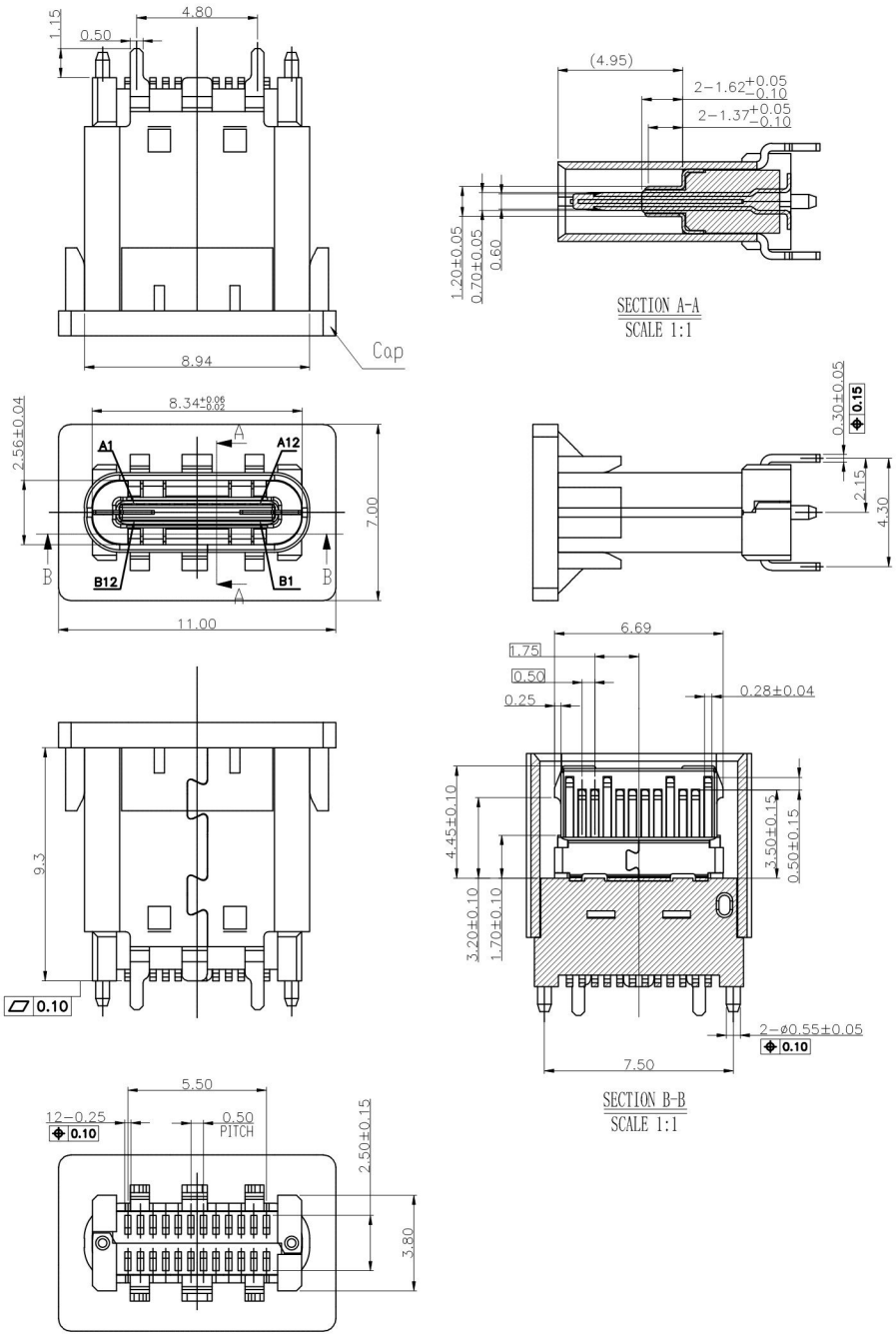

NOTES:
1.MATERIAL:
MOLDING: LCP UL94 V-0
CONTACT:COPPER ALLOY.
GOLD PLATED Min ON CONTACT AREA,100u''
Min TIN (LEAD FREE) ON SOLDER AREA,
SHELL: SUS304-H,T=0.30±0.03mm
50u" NICKEL PLATING OVER ALL.
SHILD:SUS304-H,T=0.12±0.03mm
2.MECHANICAL:
INSERTION: 5~20N.
EXTRACTION: 8~20N AFTER TEST.
DURABILITY: 10000 CYCLES
3.ELECTRICAL:
CURRENT: 5A FOR VBUS;
1.25A FOR GND PIN.
0.25A FOR OTHER.
VOLTAGE: 20 V MAX
WITHSTANDING VOLTAGE: 100V AC R.M.S.
CONTACT RESISTANCE: 40mΩ MAX.
INSULATION RESISTANCE: 100MΩ MIN.
4.ENVIRONMENTAL
TEMPERATURE RANGE -25°C ~ +85°C

ITEM:USB3.1 TYPE-C 24PF-009

USCX-24FX-XXMX-22

1-G.P
2-RoHS
3-REACH
4-HF/无卤

B-半金雾锡 1u"
D-半金雾锡 5u"
F-半金雾锡 15u"
H-半金雾锡 30u"

1-卷带包装
2-PVC盒

N-可焊镍
S-雾锡
T-亮锡
A-金

K-黑色
N-本色

RUI CHI

.X:±0.25	X.:±1°	APP.		DWG NO.	LZUC30D020(CU)
.XX:±0.15	.X:±0.5°				
.XXX:±0.05	.XX:±0.02°	CHK.		TITLE	USB 3.1 C TYPE直立短体 SMT成品 9.30H 四脚插板
UNIT mm		DGN.	朱远明15.07.28		
SCALE 1:1				SERIES	
REV. A0	SHEET: 1/4	DRW.	朱远明15.07.28		

REV	ECN NO.	DISCRIPTION	CHEKED/DATE	APPD/DATE

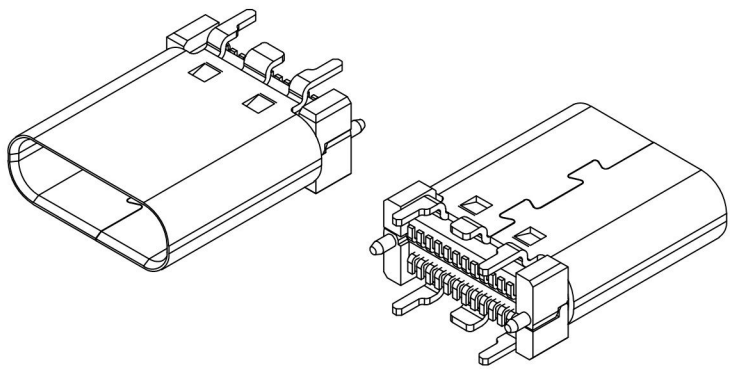

USBTYPE-CFULL-FEATUREDRECEPTACLEINTERFACEPINASSIGNMENTS

PIN	Signal Name	Description	PIN	Signal Name	Description
A1	GND	Groundreturn	B12	GND	Groundreturn
A2	SSTXp1	Positivehalfoffirs t SuperSpeedTX differentialpair	B11	SSRXp1	Positivehalfoffirs t SuperSpeed RX differentialpair
A3	SSTXn1	Negativehalfof firstSuperSpeedTX differentialpair	B10	SSRXn1	Negativehalfof firstSuperSpeed RX differentialpair
A4	VBUS	BusPower	B9	VBUS	BusPower
A5	CC1	Configuration Channel	B8	SBU2	SidebandUse(SBU)
A6	Dp1	Positivehalfofthe USB2.0differential pair-Position1	B7	Dn2	Negativehalfofthe USB2.0differential pair-Position 2
A7	Dn1	Negativehalfofthe USB2.0differential pair-Position1	B6	Dp2	Positivehalfofthe USB2.0differential pair-Position 2
A8	SBU1	SidebandUse(SBU)	B5	CC2	Configuraation Channel
A9	VBUS	BusPower	B4	VBUS	BusPower
A10	SSRXn2	Negativehalfof secondSuperSpeed RXdifferentialpair	B3	SSTXn2	Negativehalfof secondSuperSpeed TXdifferentialpair
A11	SSRXp2	Positivehalfof secondSuperSpeed RXdifferentialpair	B2	SSTXp2	Positivehalfof secondSuperSpeed TXdifferentialpair
A12	GND	Groundreturn	B1	GND	Groundreturn

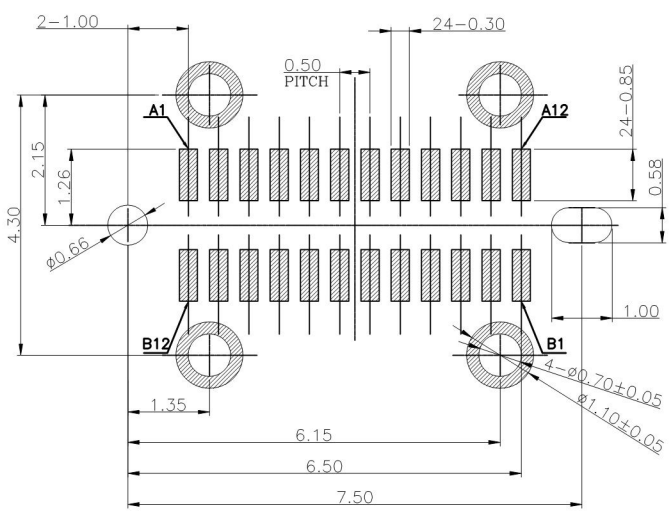

RECOMMENDED P.C.B. LAYOUT (T:1.00mm)
TOLERANCE UNSPECIFIED ±0.05mm

ITEM:USB3.1 TYPE-C 24PF-009

RUI CHI

.X:±0.25	X.:±1°	APP.		DWG NO.	LZUC30D020(CU)
.XX:±0.15	.X:±0.5°				
.XXX:±0.05	.XX:±0.02°	CHK.		TITLE	USB 3.1 C TYPE 直立 SMT成品 PCB LAYOUT
UNIT mm		DGN.	朱远明15.07.28		
SCALE 1:1				SERIES	
REV. A0	SHEET: 2/4	DRW.	朱远明15.07.28		